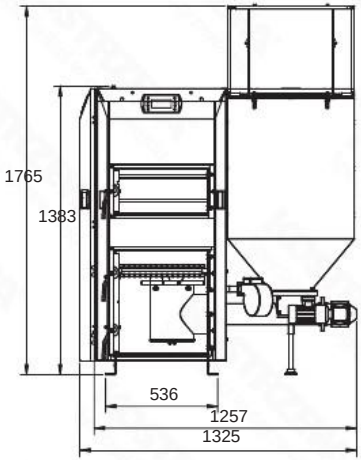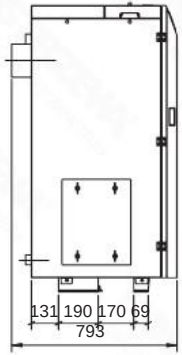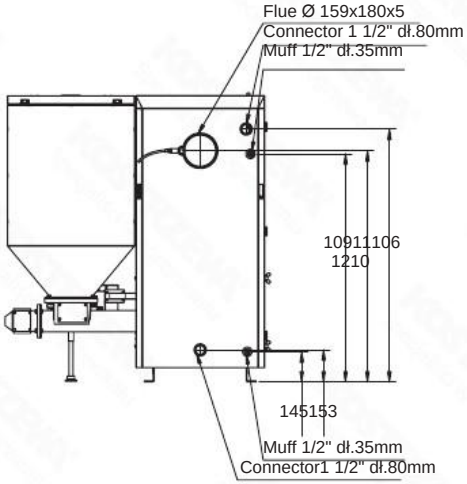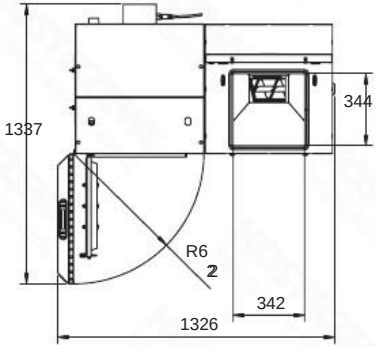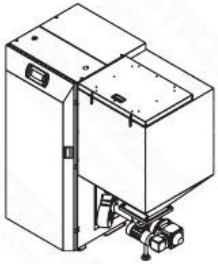Dimensions - Farmer Bio 24kW