Pellets 100 - схема подключения 2
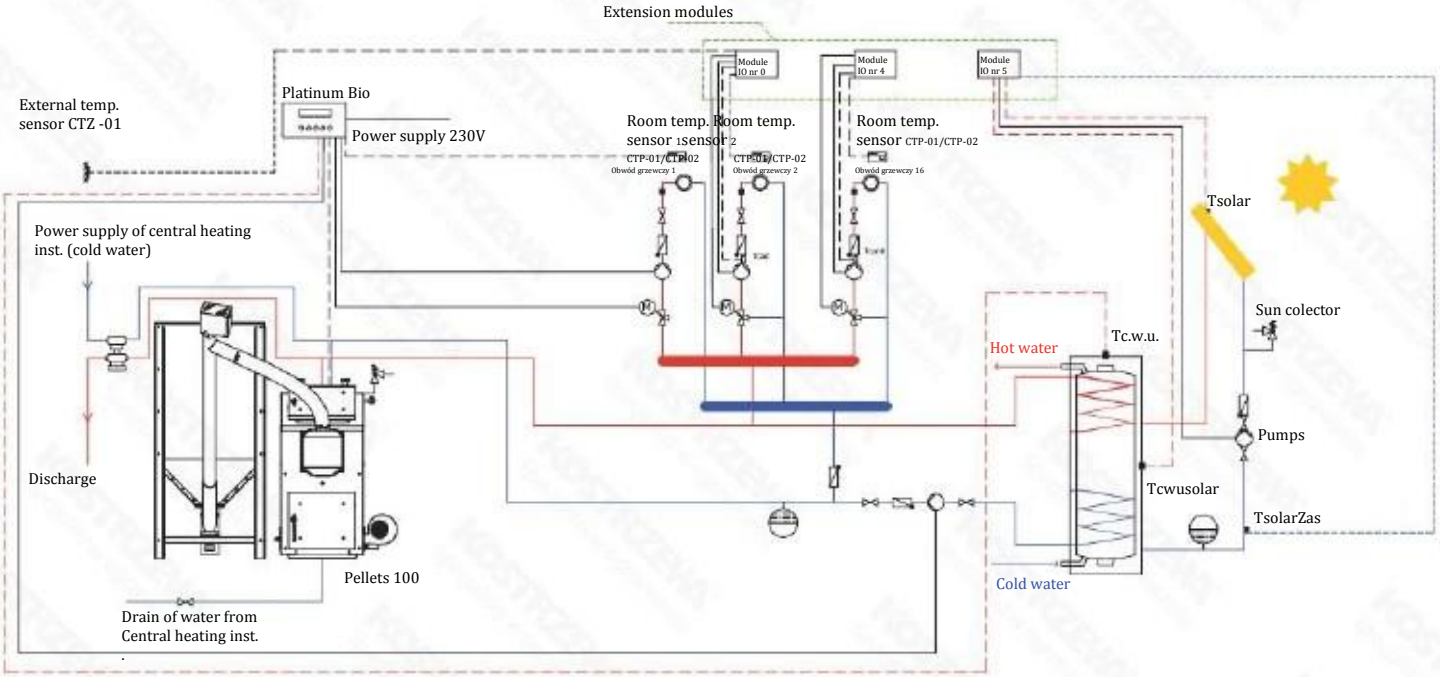
ATTENTION! To realize all functions additional modules must be purchased